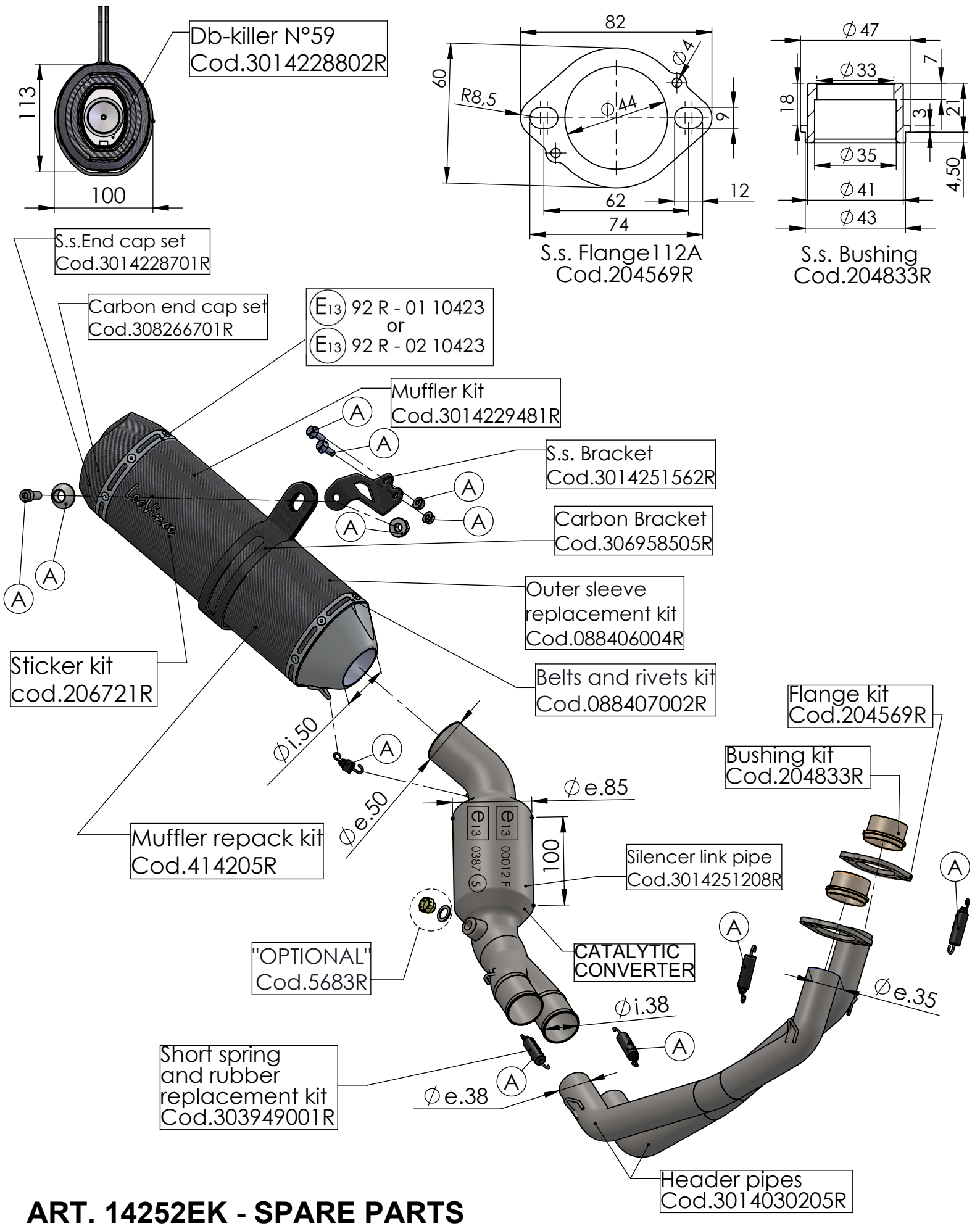

ART. 14252EK - SPARE PARTS

YAMAHA MT-07 / MT-07 TRACER / XSR 700 (also fit 35Kw versions)

(A) FITTING KIT Cod. 3014251601R