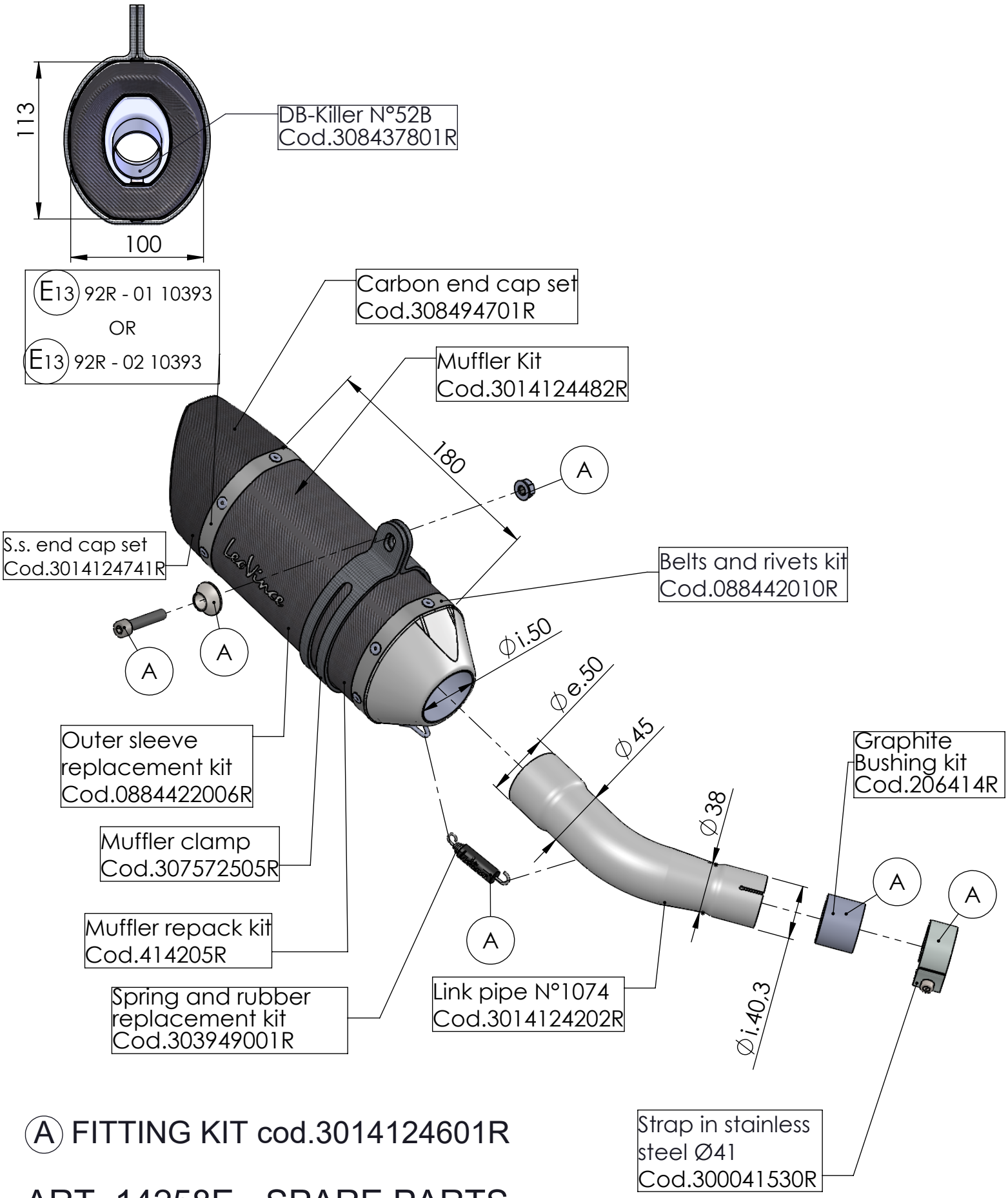

Ⓐ FITTING KIT cod.3014124601R

ART. 14258E - SPARE PARTS

YAMAHA YZF-R3 - MT-03

SLIP-ON - LV PRO - CARBON - APPROVED