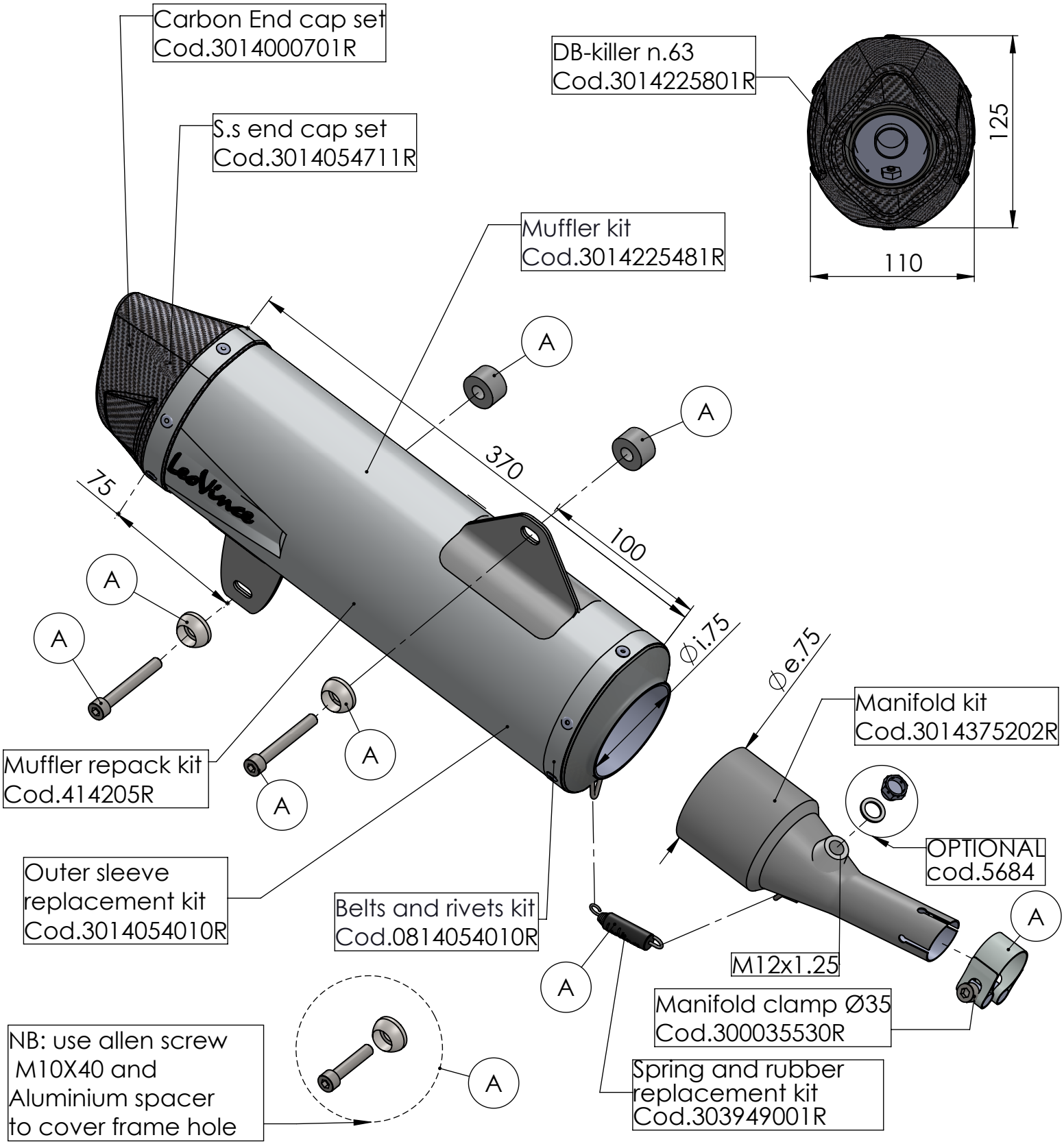

ART. 14375E - SPARE PARTS

YAMAHA X-MAX 300 / TECH MAX

Ⓐ FITTING KIT Cod. 3014225601R