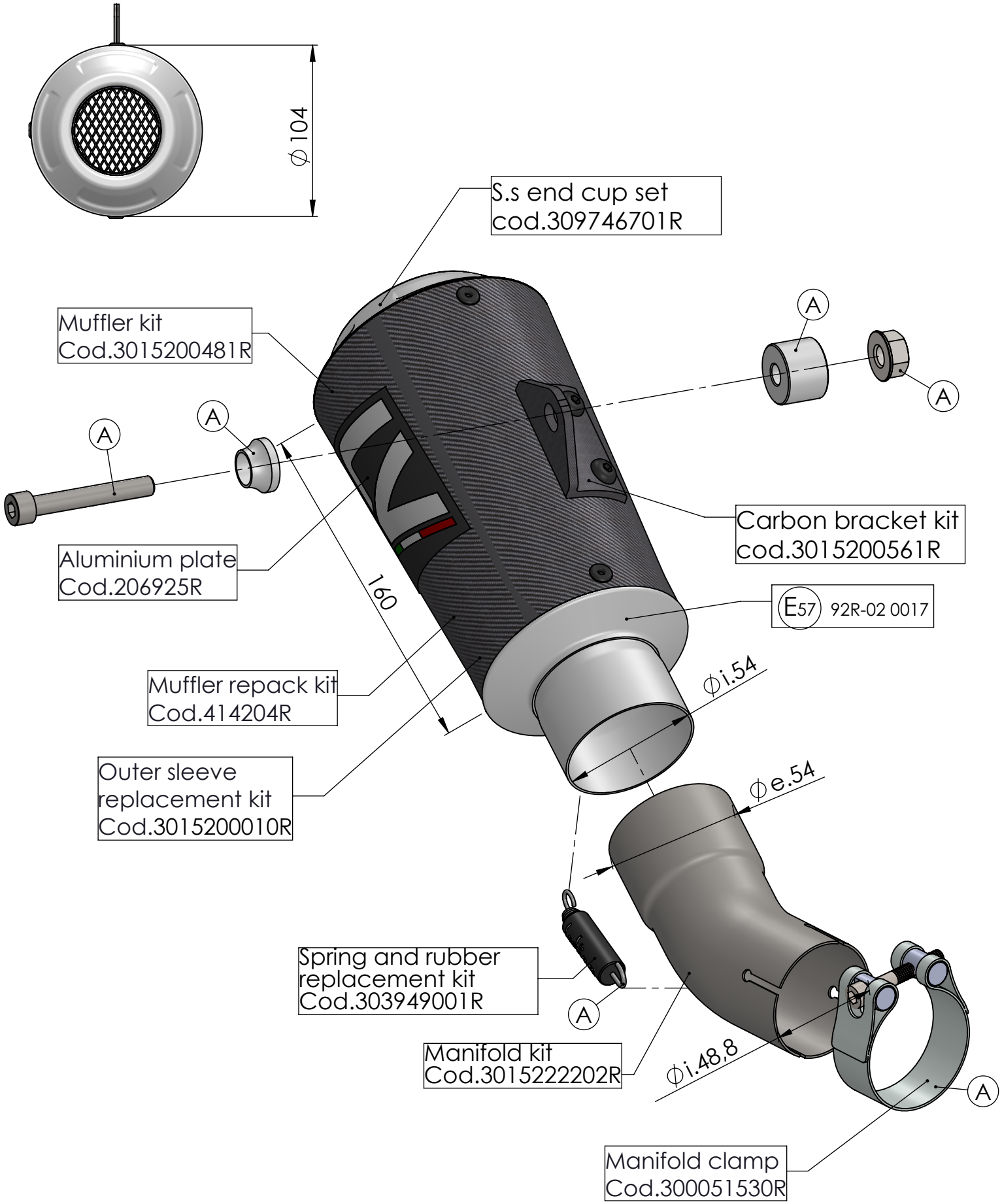

ART. 15222C SPARE PARTS

HONDA CB 1000 R NEO SPORTS

Ⓐ FITTING KIT Cod. 3015222601R