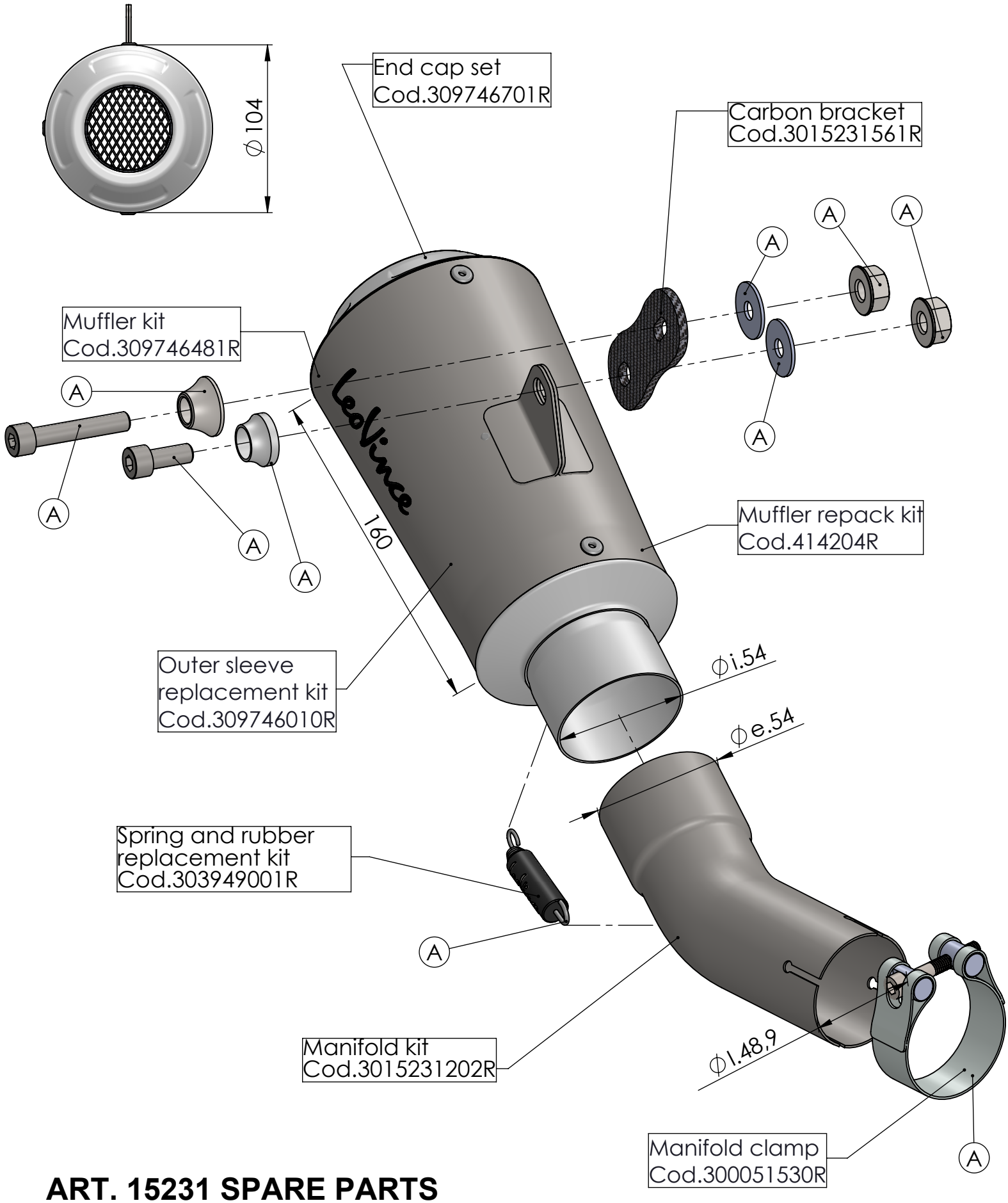

ART. 15231 SPARE PARTS

SUZUKI GSX - R 1000 / R

Ⓐ FITTING KIT Cod. 3015231601R