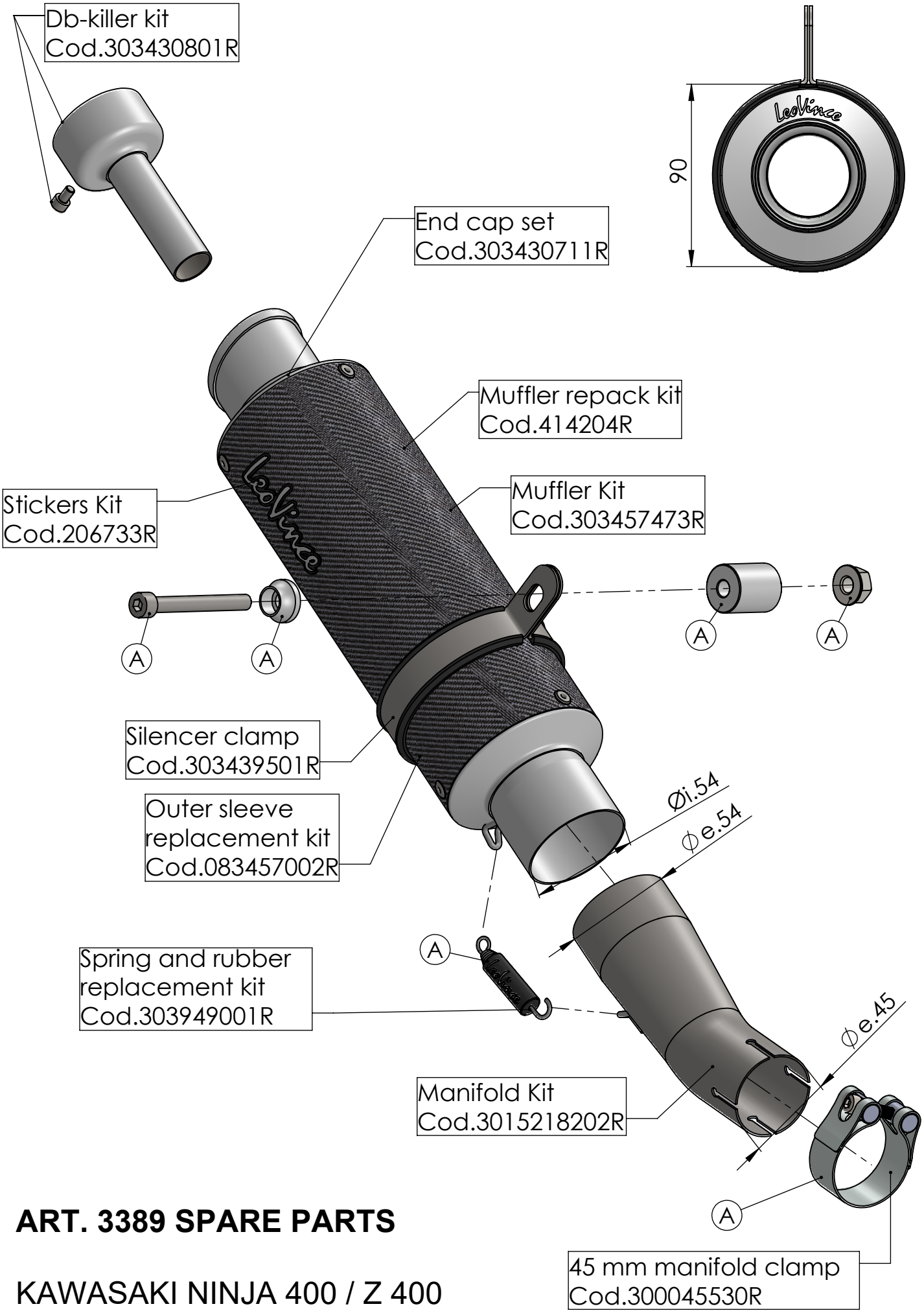

ART. 3389 SPARE PARTS

KAWASAKI NINJA 400 / Z 400

Ⓐ FITTING KIT COD. 3015218601R