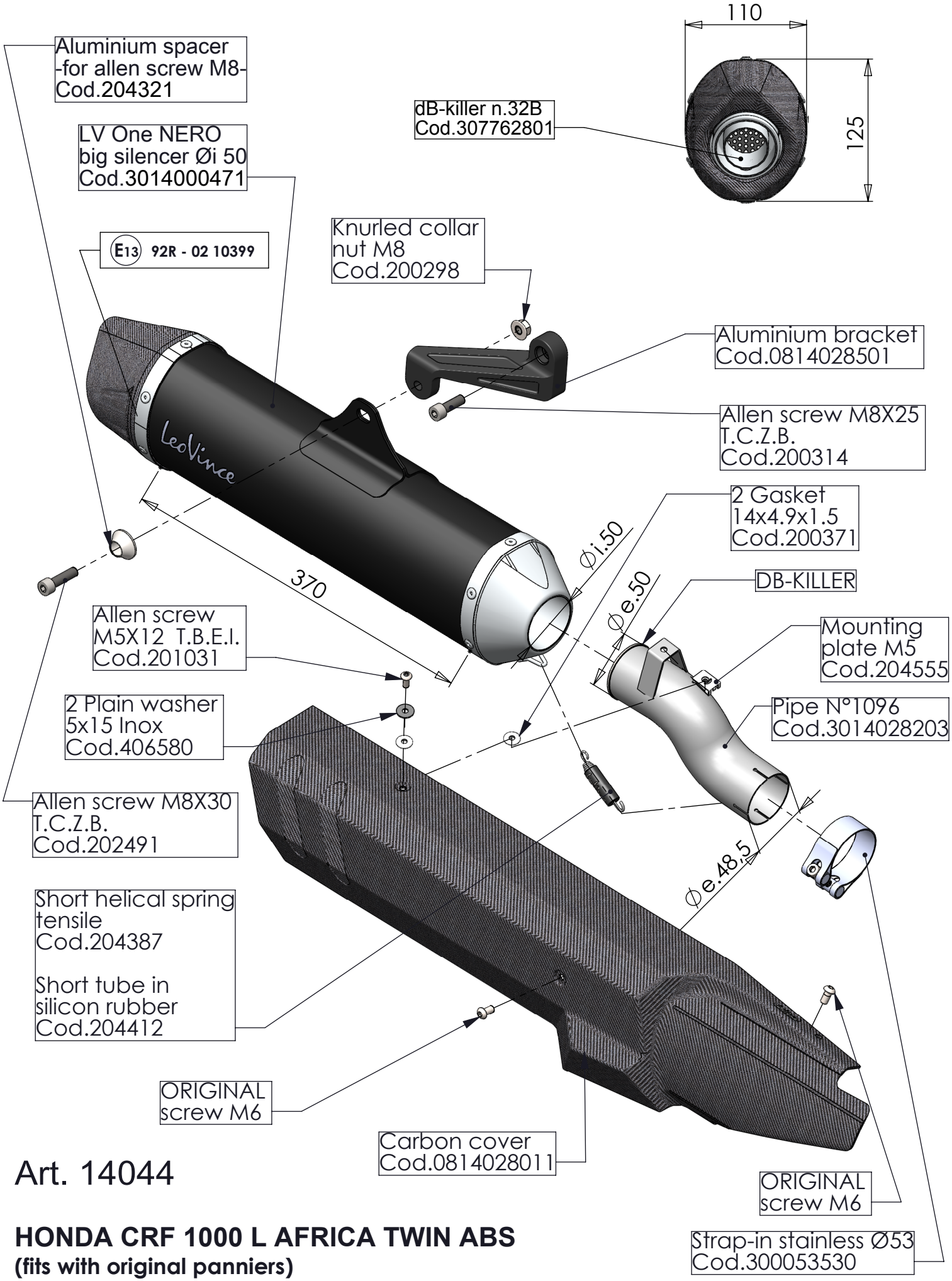

Art. 14044

HONDA CRF 1000 L AFRICA TWIN ABS
(fits with original panniers)

SLIP-ON - "NERO BIG" - **APPROVED**