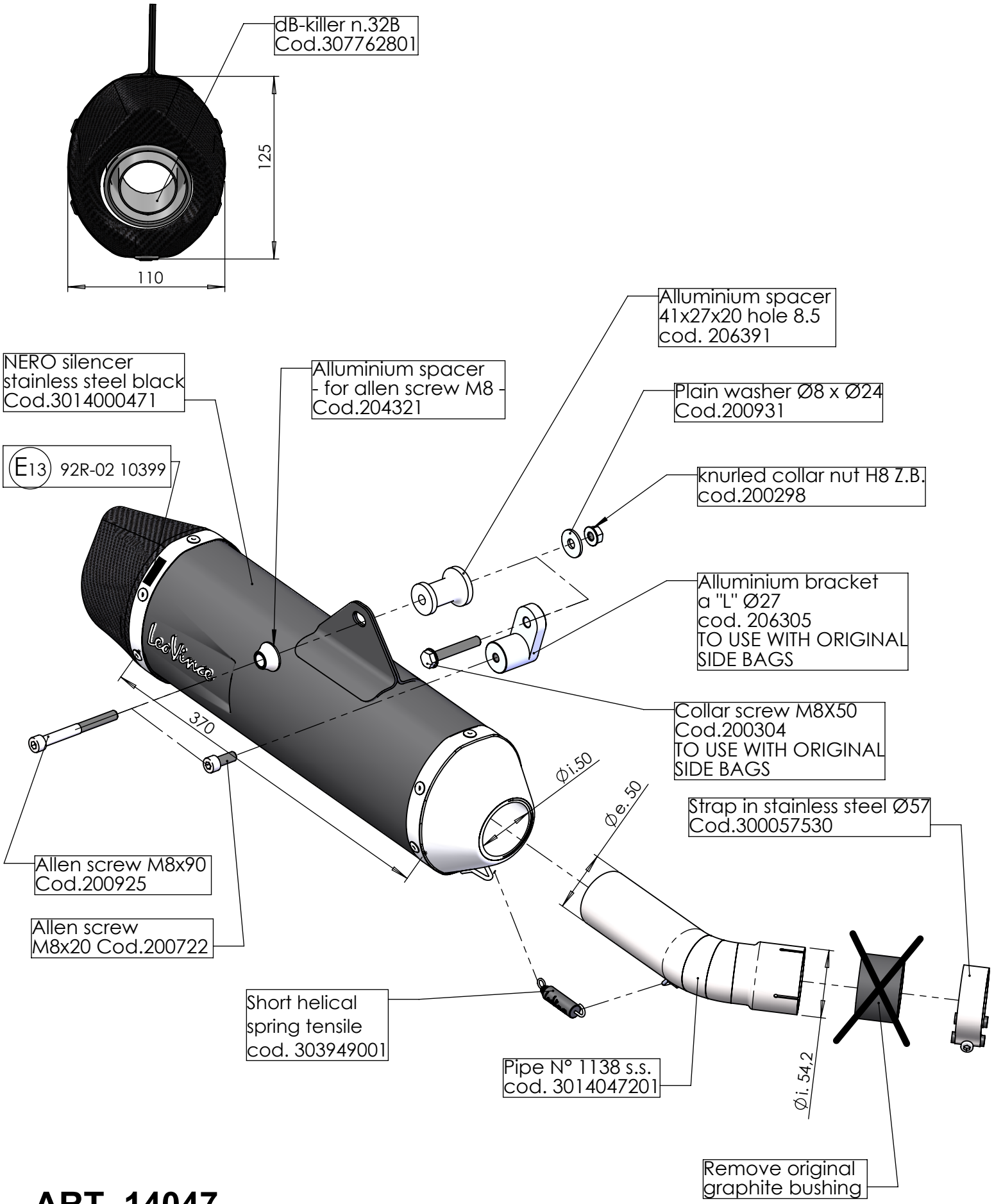

ART. 14047

SUZUKI V-STROM 1000 ABS / XT (fits with original panniers)

SLIP-ON - NERO - STAINLESS STEEL - APPROVED