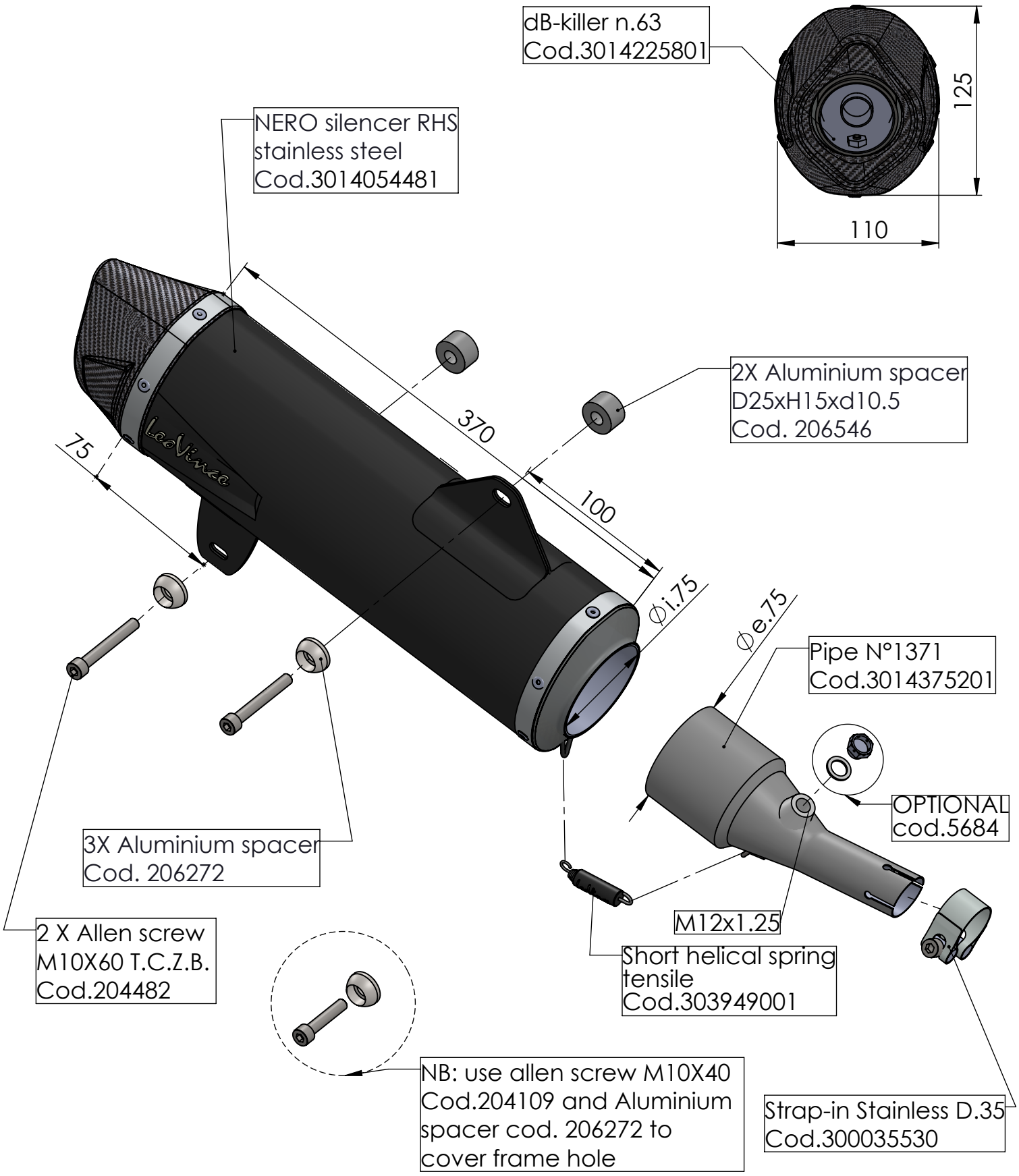

ART. 14077

YAMAHA X-MAX 300 / TECH MAX

SLIP-ON - NERO - STAINLESS STEEL