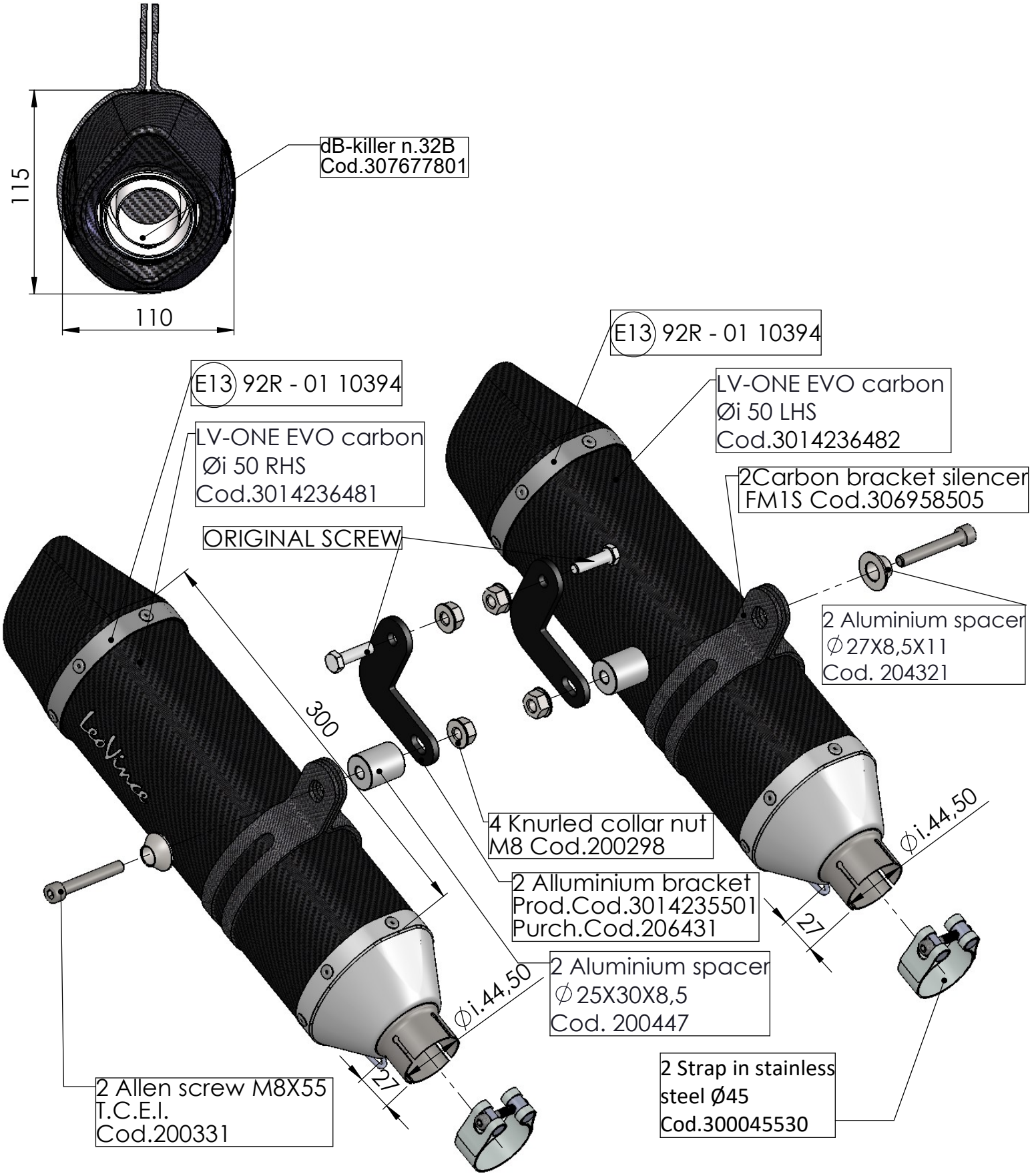

Art. 14236E

TRIUMPH SPEED TRIPLE 1050

SLIP-ON - LV ONE EVO - CARBON