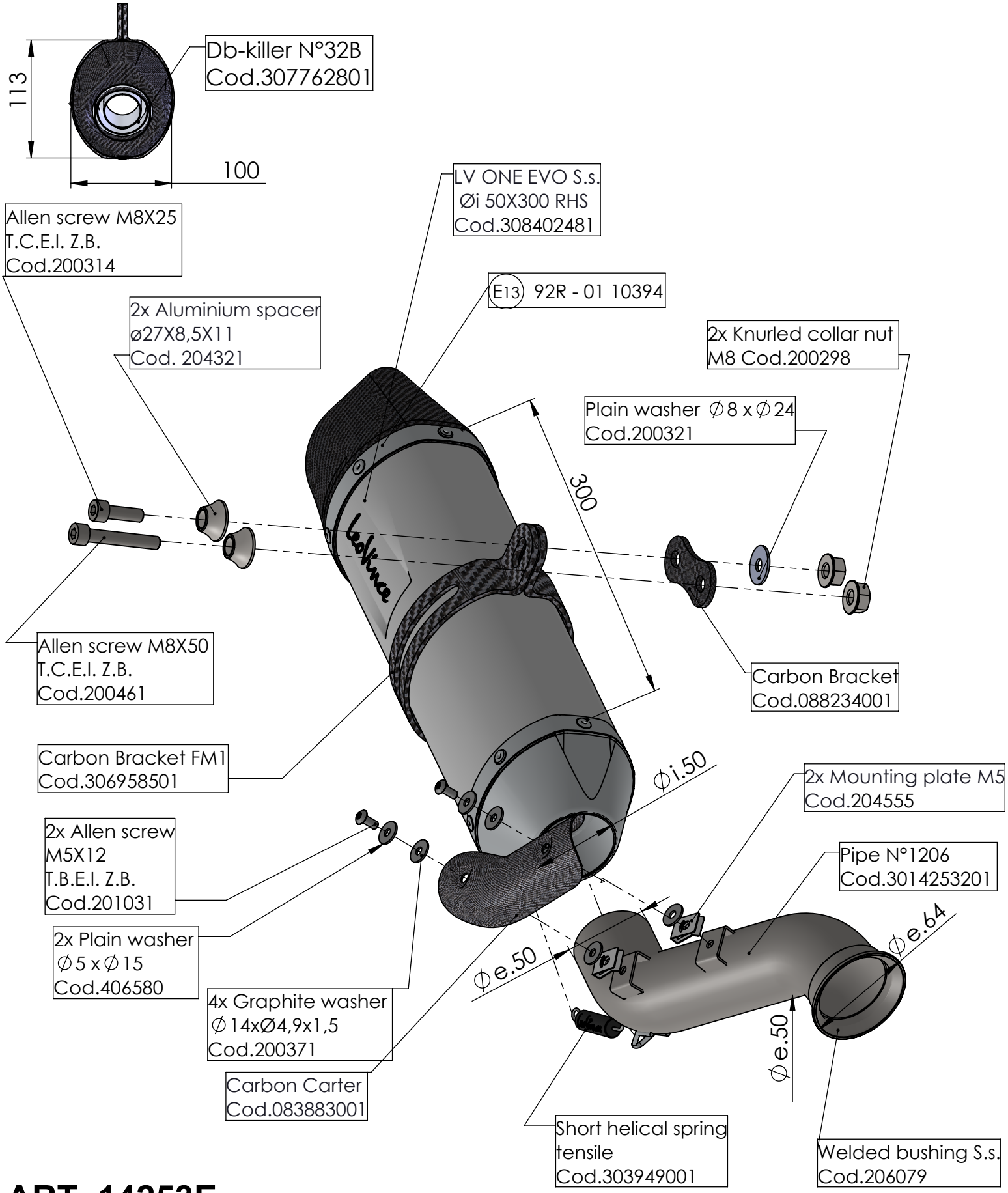

ART. 14253E

KTM 790 DUKE / 790 DUKE L (A2) / 890 DUKE R
(not compatible with original panniers)

SLIP-ON - LV ONE EVO - STAINLESS STEEL - APPROVED