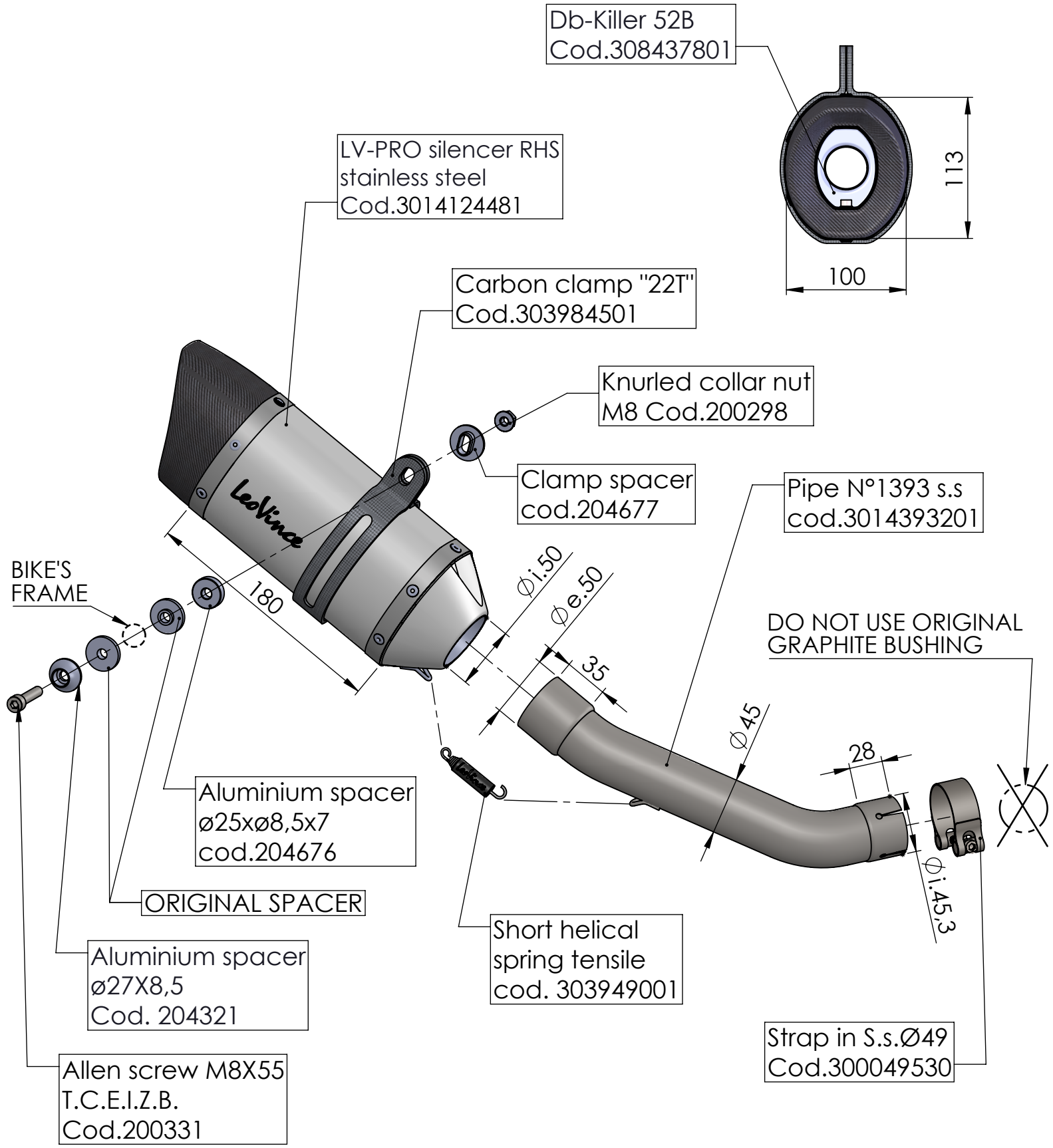

ART. 14395E

KTM DUKE 125 / 390

SLIP-ON - LV-PRO - STAINLESS STEEL