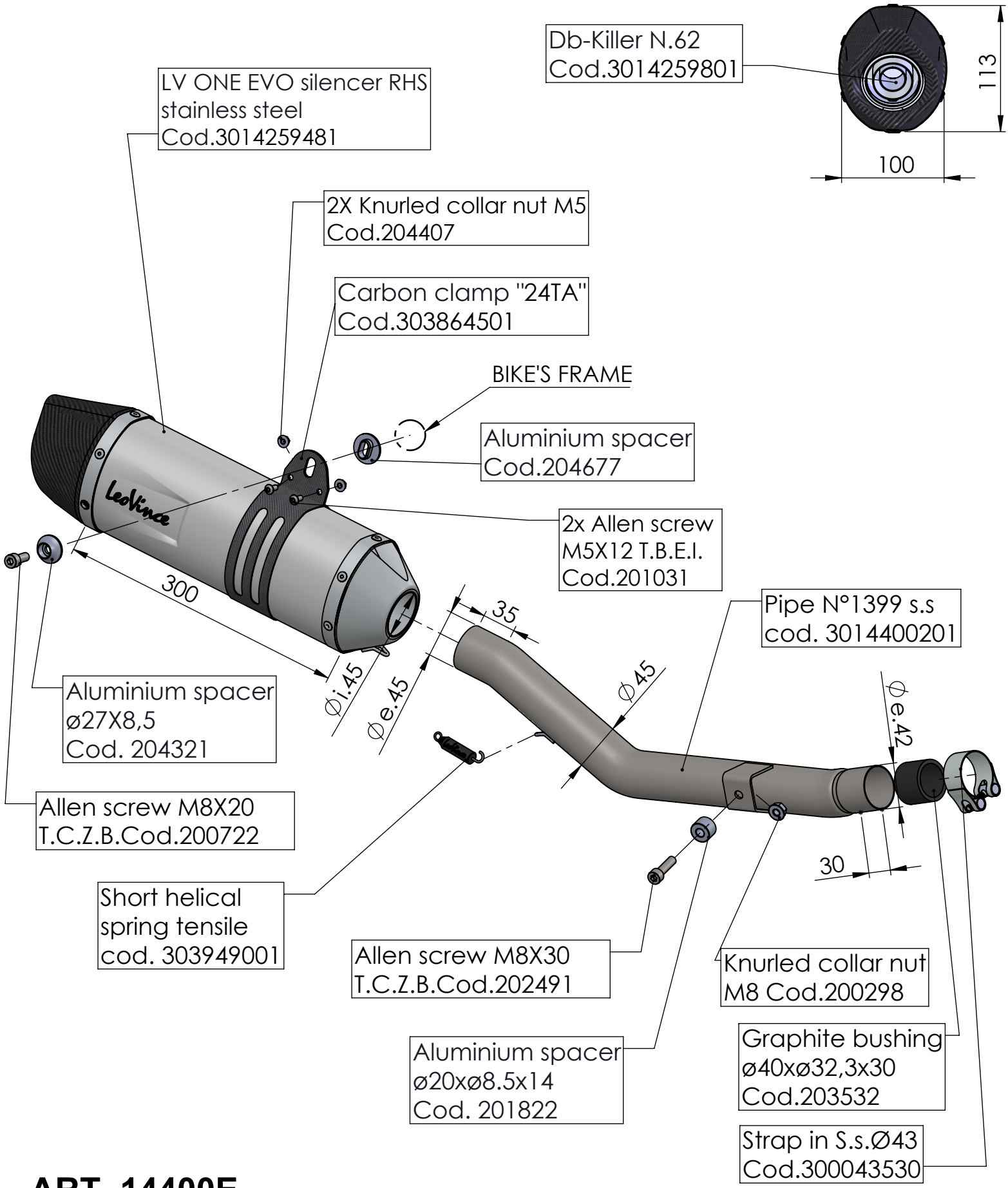

ART. 14400E

HONDA CRF 300 L / CRF 300 RALLY

SLIP-ON - LV ONE EVO - STAINLESS STEEL