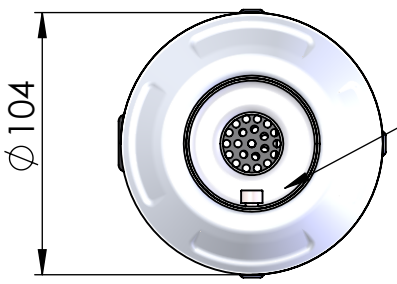

Db-Killer ø25
Cod.303457801

Bracket LHS
cod. 3015007502

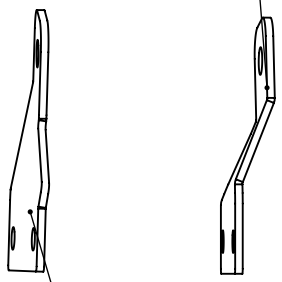

Bracket RHS
cod. 3015007501

CLASSIC RACER silencer LHS
stainless steel black
Cod.3015007486

2x Aluminium spacer
ø27Xø8,5
Cod. 204321

S.s black bracket LHS
Prod.cod. 3015007502
Cod. 206689

2x Allen screw M8X40
T.C.E.I.Z.B.
Cod.200993

2x Knurled collar nut
M8 Cod.200298

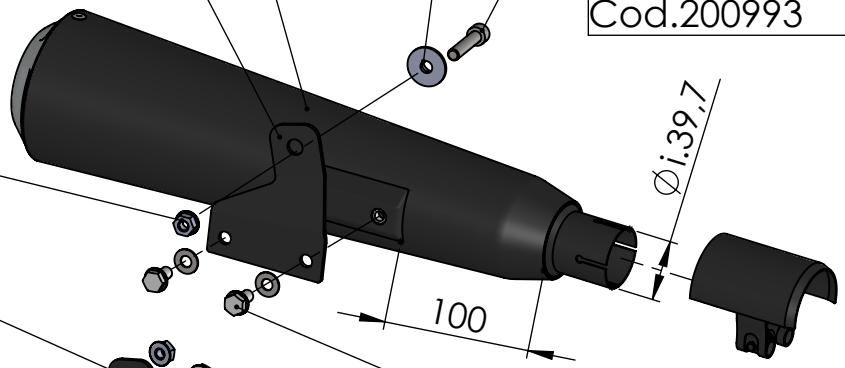

S.s black bracket RHS
Prod.cod. 3015007501
Cod. 206689

N°4 Knurled
collar screw
M8X12 T.E.
Cod.206731

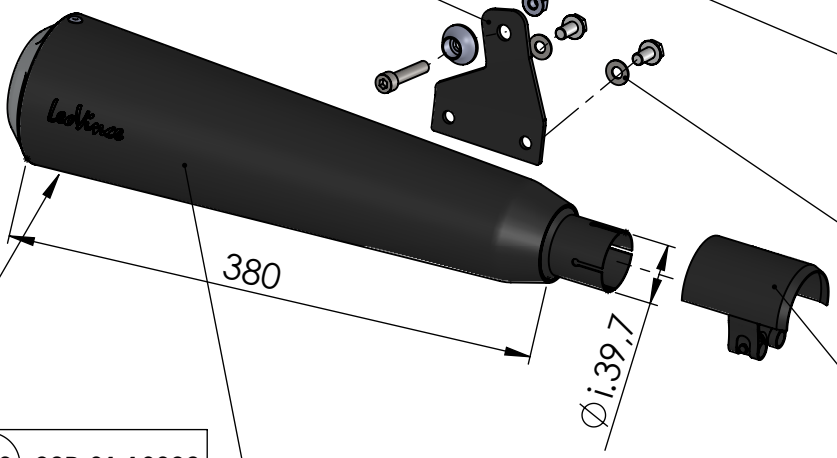

4x Plain washer ∅8x∅17
Cod.200294

2x Strap in S.s.Ø43
and welded heat shield
Cod.3015007001

E13 92R-01 10392

CLASSIC RACER silencer RHS
stainless steel black
Cod.3015007485

ART.15007B

ROYAL ENFIELD CONTINENTAL GT 650 / INTERCEPTOR 650

SLIP-ON - CLASSIC RACER - BLACK