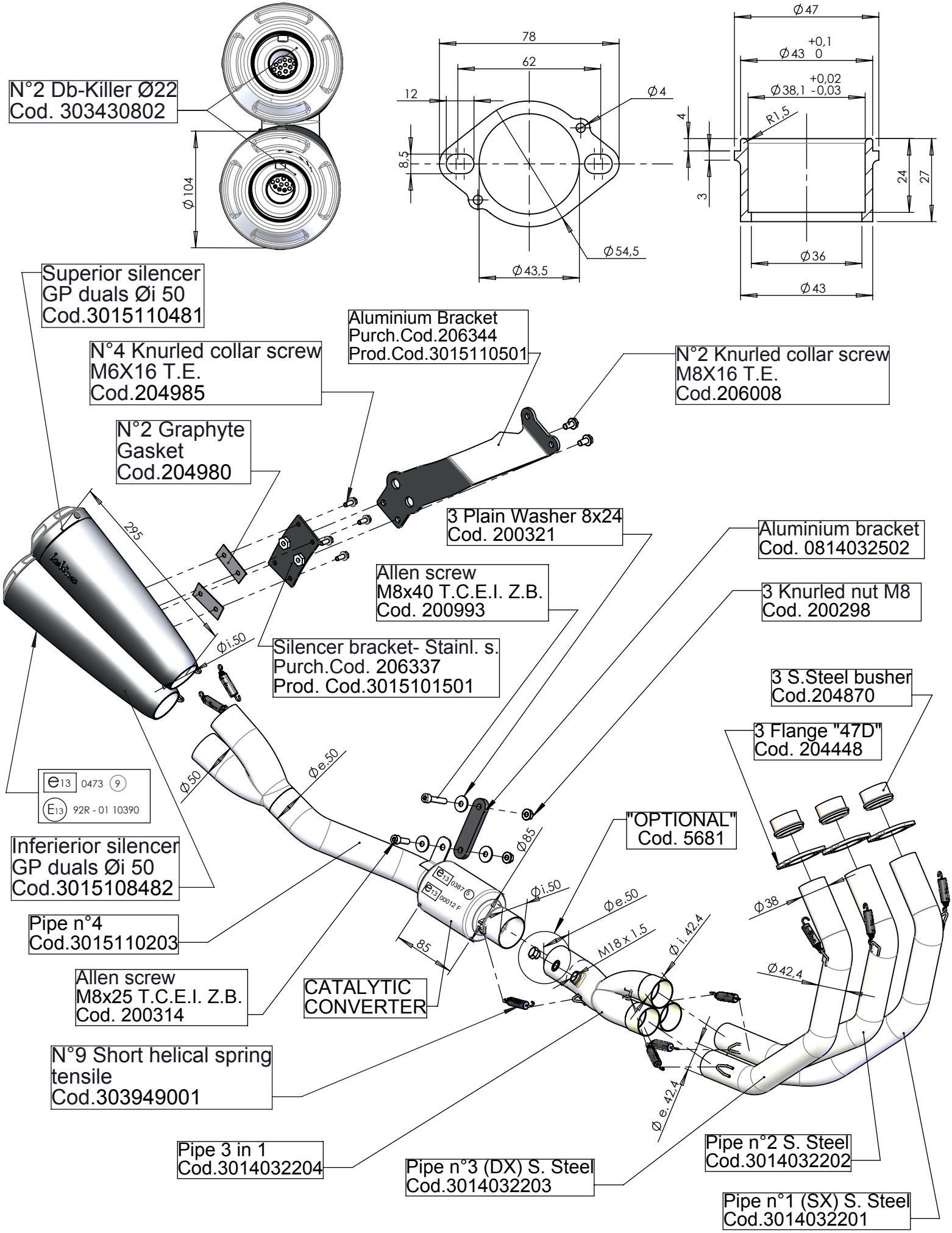

Art. 15108K YAMAHA XSR 900 - MT-09

Full System 3/1 - "GP DUALS" - APPROVED