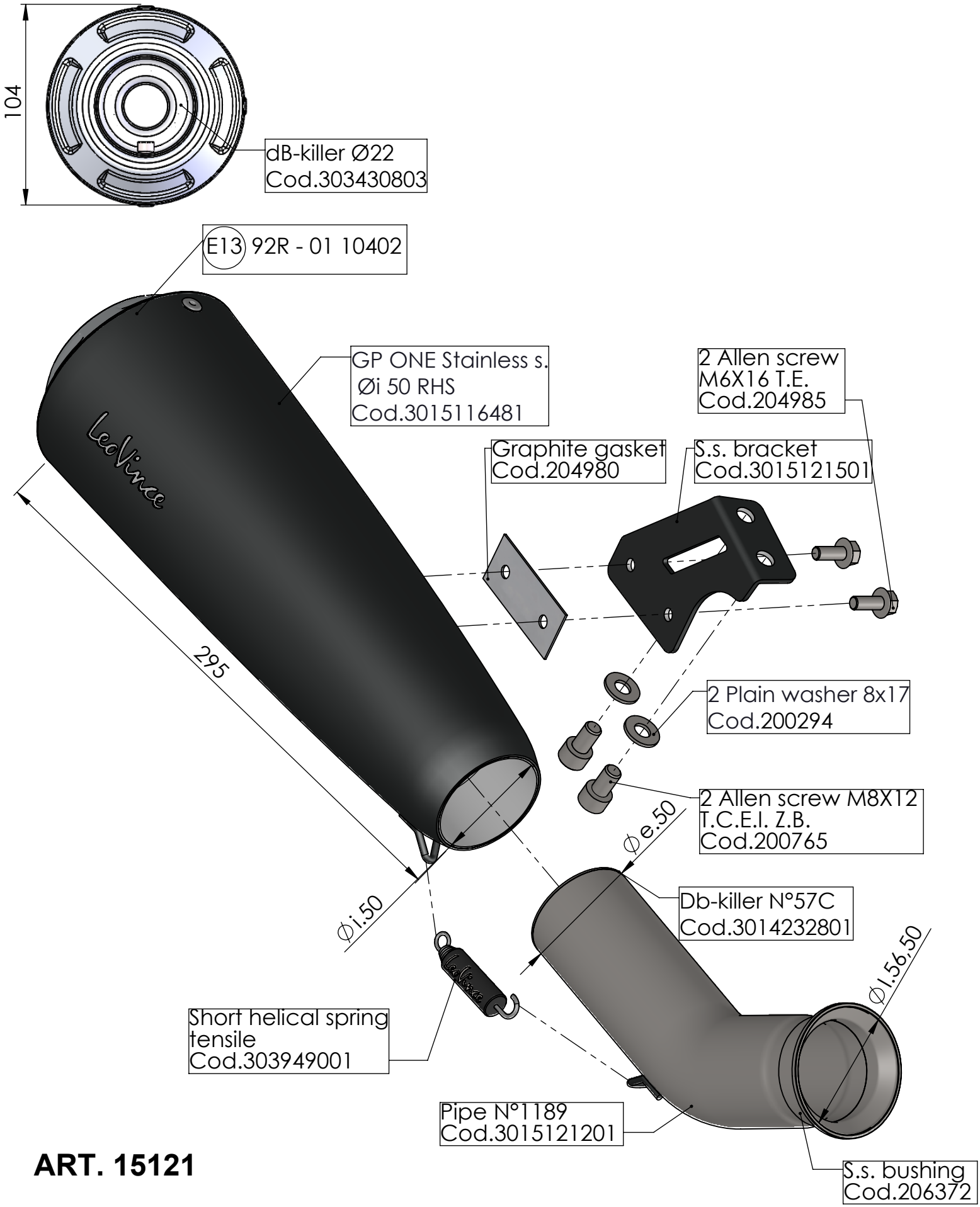

ART. 15121

HUSQVARNA SVARTPILEN 401 / VITPILEN 401

SLIP-ON - GP ONE - STAINLESS S. - APPROVED