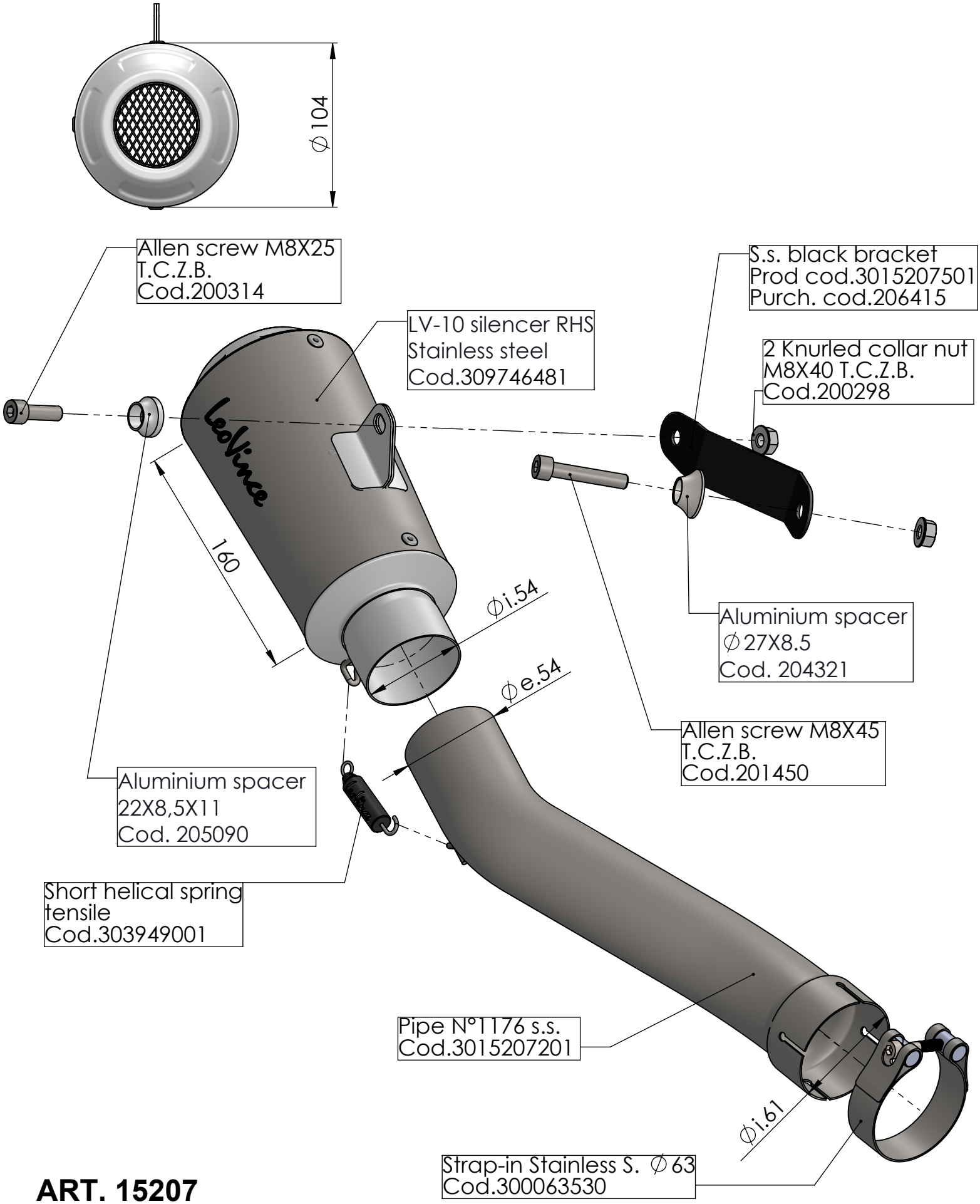

ART. 15207

HONDA CBR 1000 RR FIREBLADE / SP / SP2

SLIP-ON - LV-10 - STAINLESS STEEL.