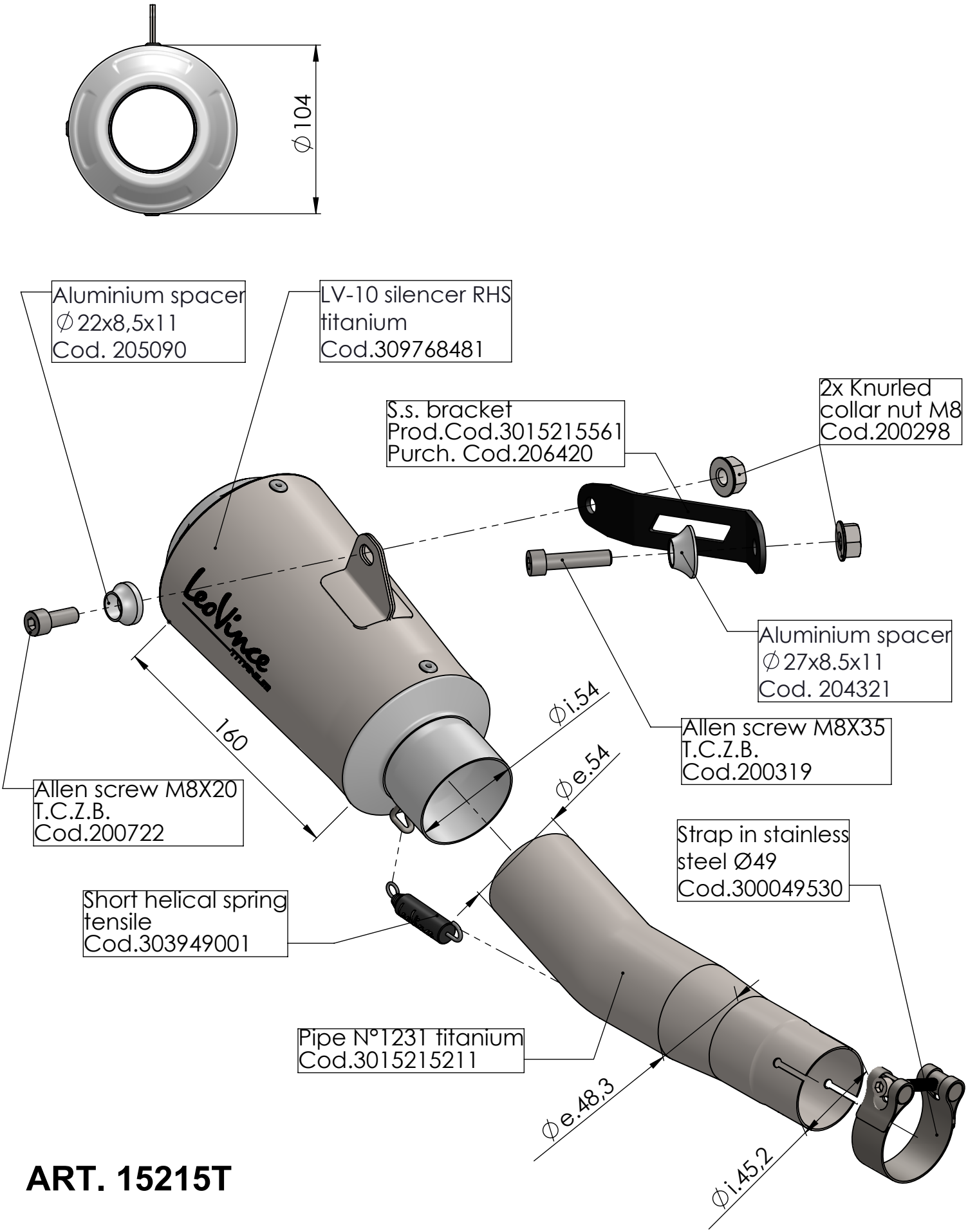

ART. 15215T

YAMAHA YZF-R6

SLIP-ON - LV-10 - TITANIUM