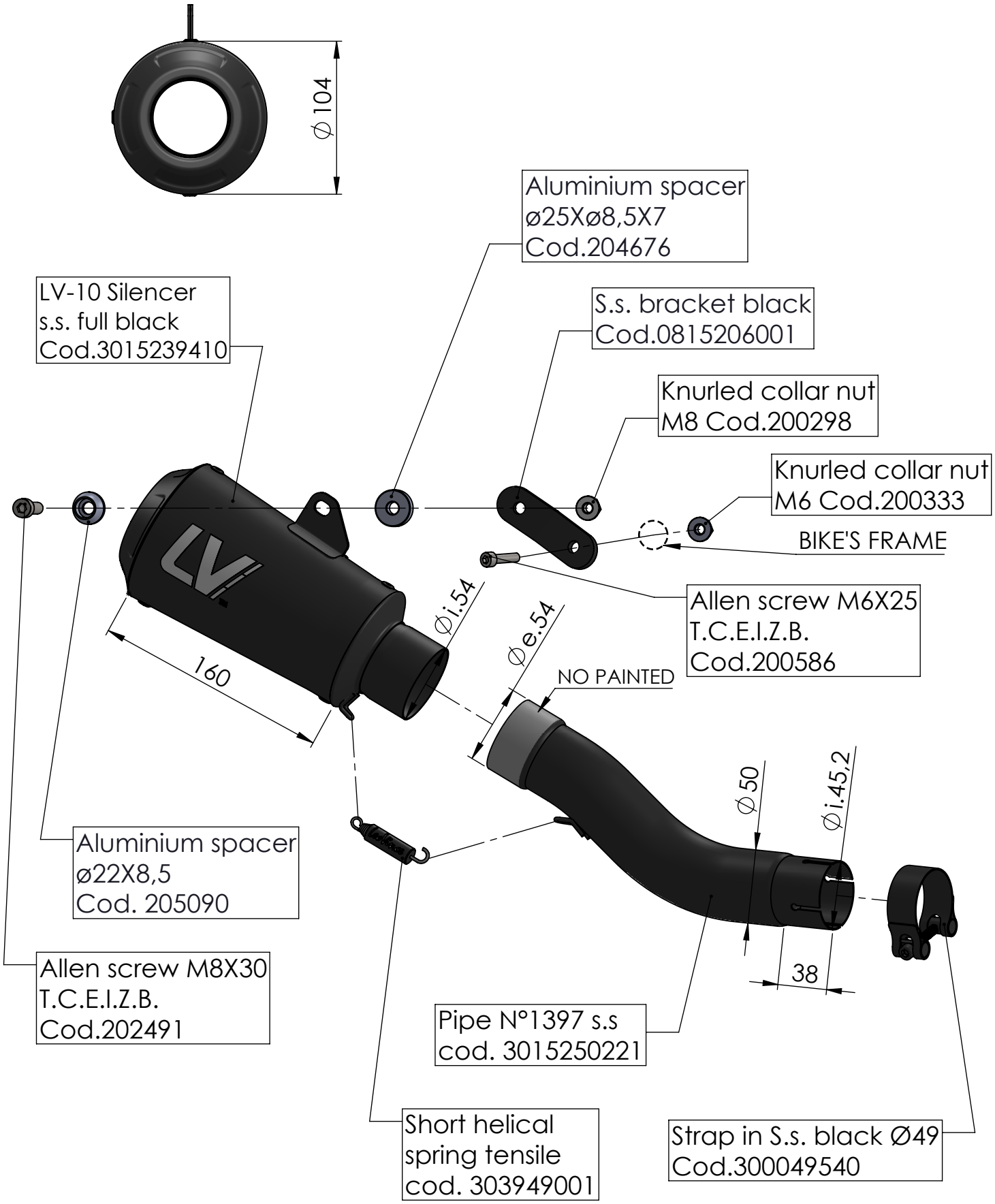

ART. 15250FB

DUCATI SCRAMBLER 800 ICON / DARK (also fits 35kW version)

SLIP-ON - LV-10 - FULL BLACK