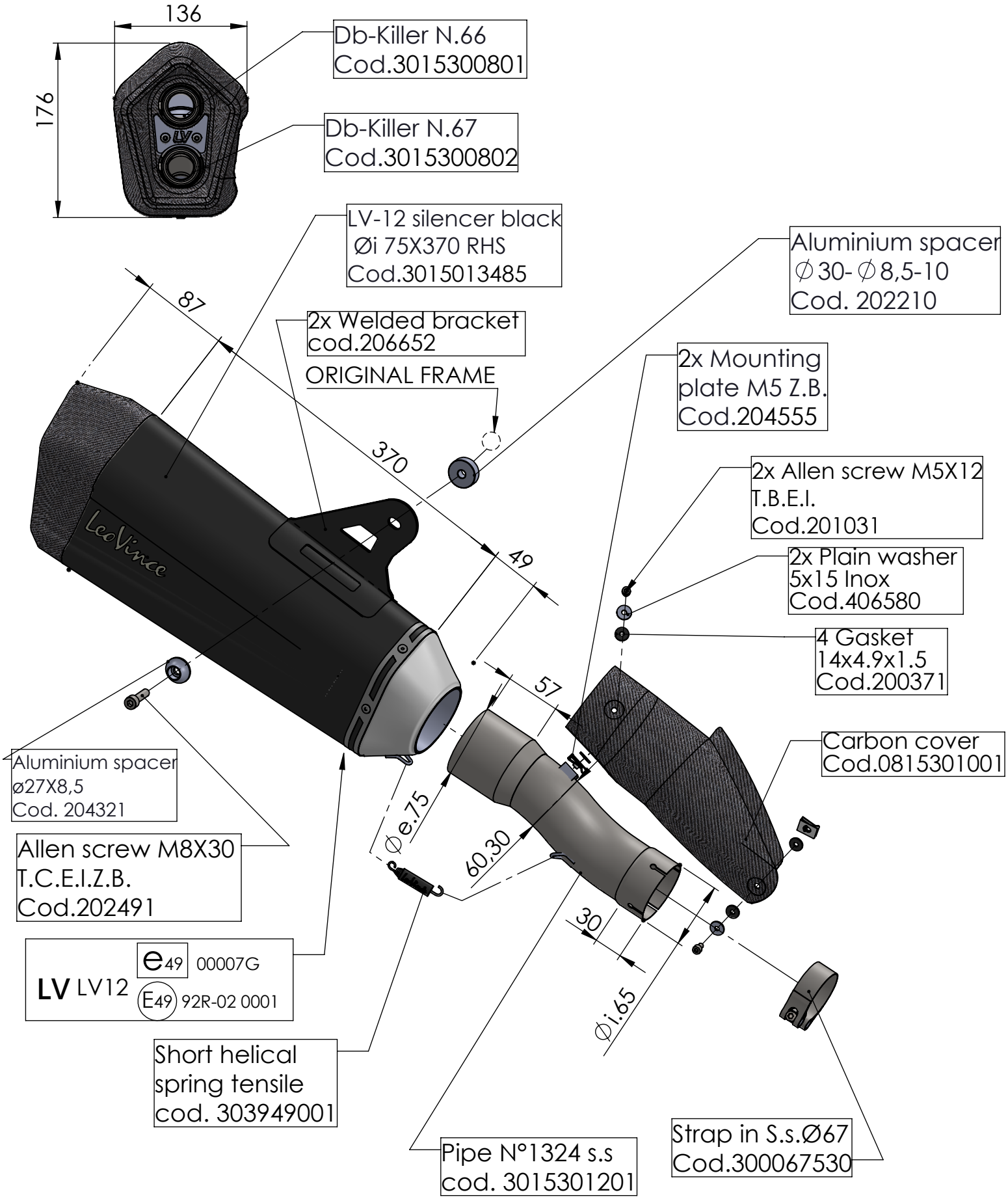

ART. 15301B

BMW R 1200 GS / ADVENTURE - R 1250 GS / ADVENTURE
(Fits with original panniers)

SLIP-ON - LV-12 - BLACK - APPROVED