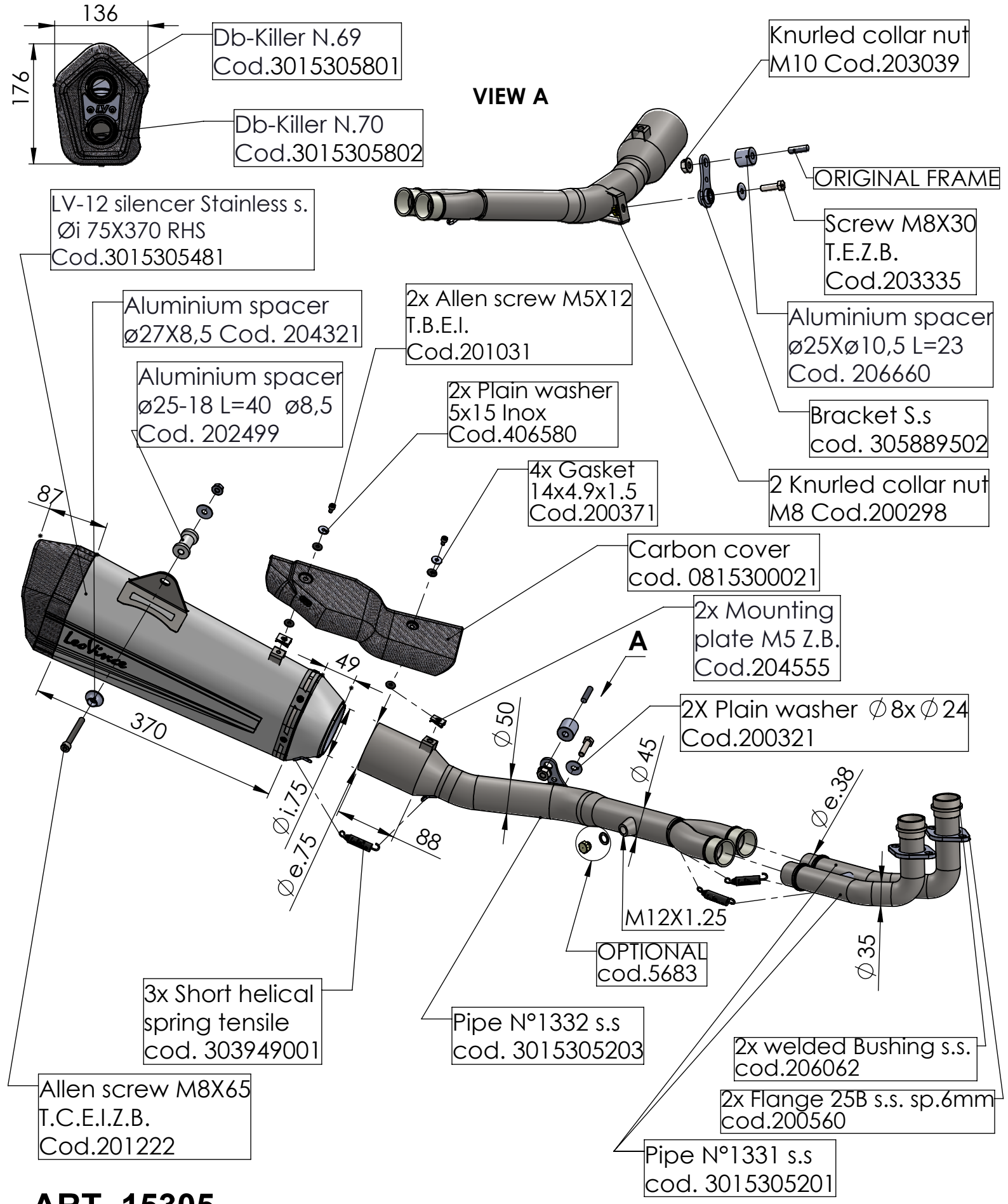

ART. 15305

YAMAHA T-MAX 560/TECH MAX

SLIP-ON - LV-12 - STAINLESS STEEL

WARNING

it is advisable to optimize the carburation by remapping the stock ECU or by adopting an additional ECU unit.