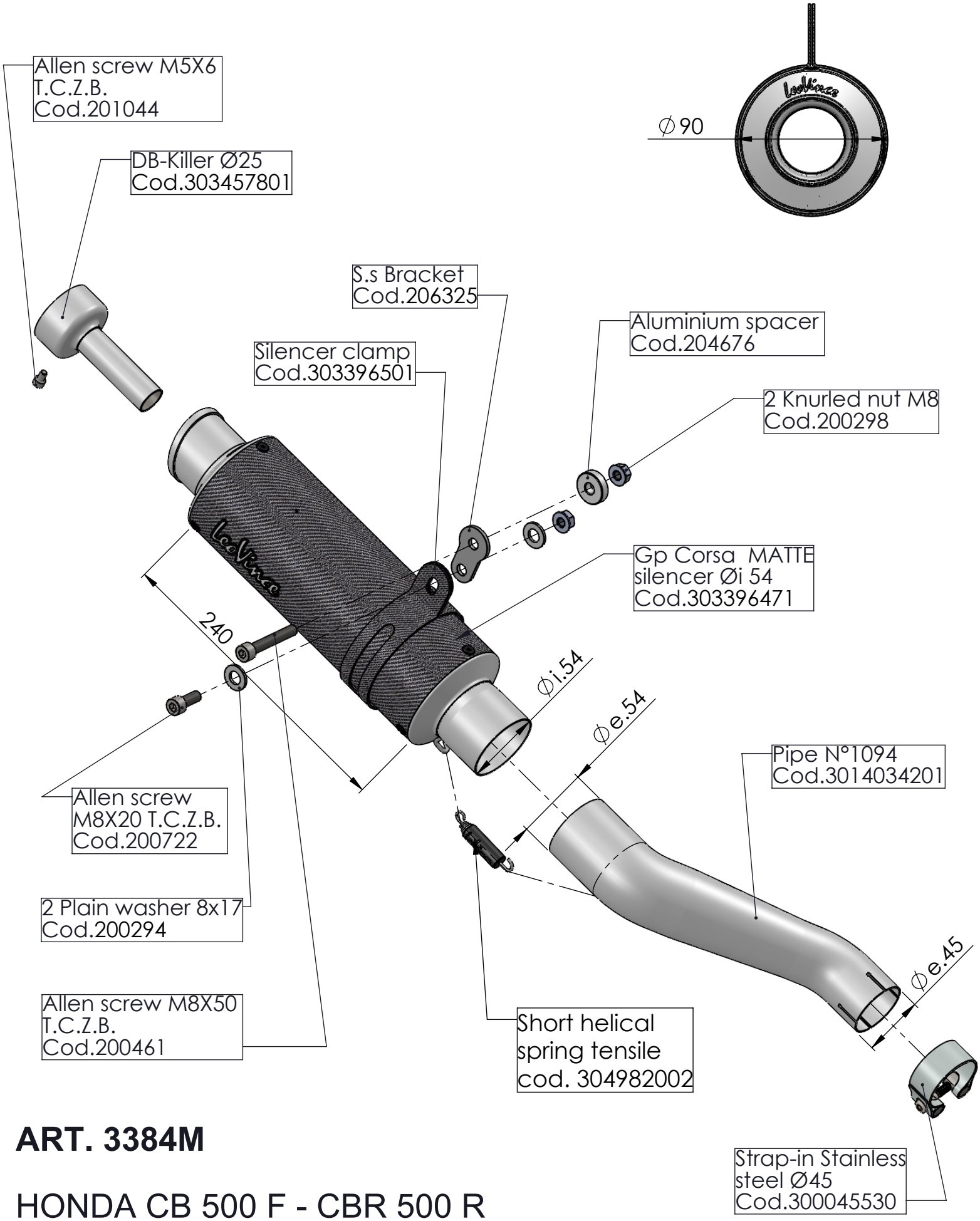

ART. 3384M

HONDA CB 500 F - CBR 500 R
(do not fits with original centre stand)

SLIP ON - GP CORSA MATTE - CARBON