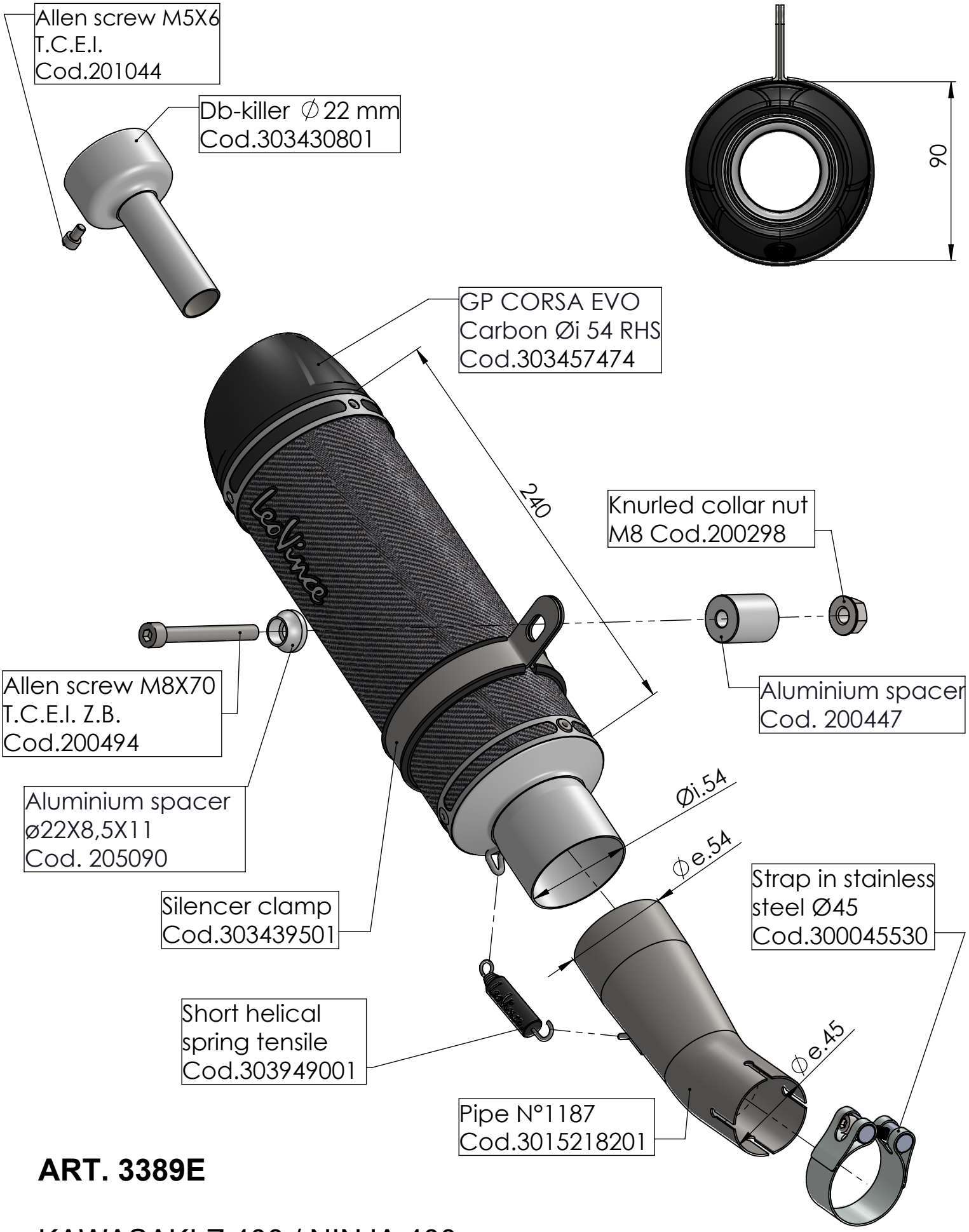

ART. 3389E

KAWASAKI Z 400 / NINJA 400

SLIP-ON - GP CORSA EVO - CARBON