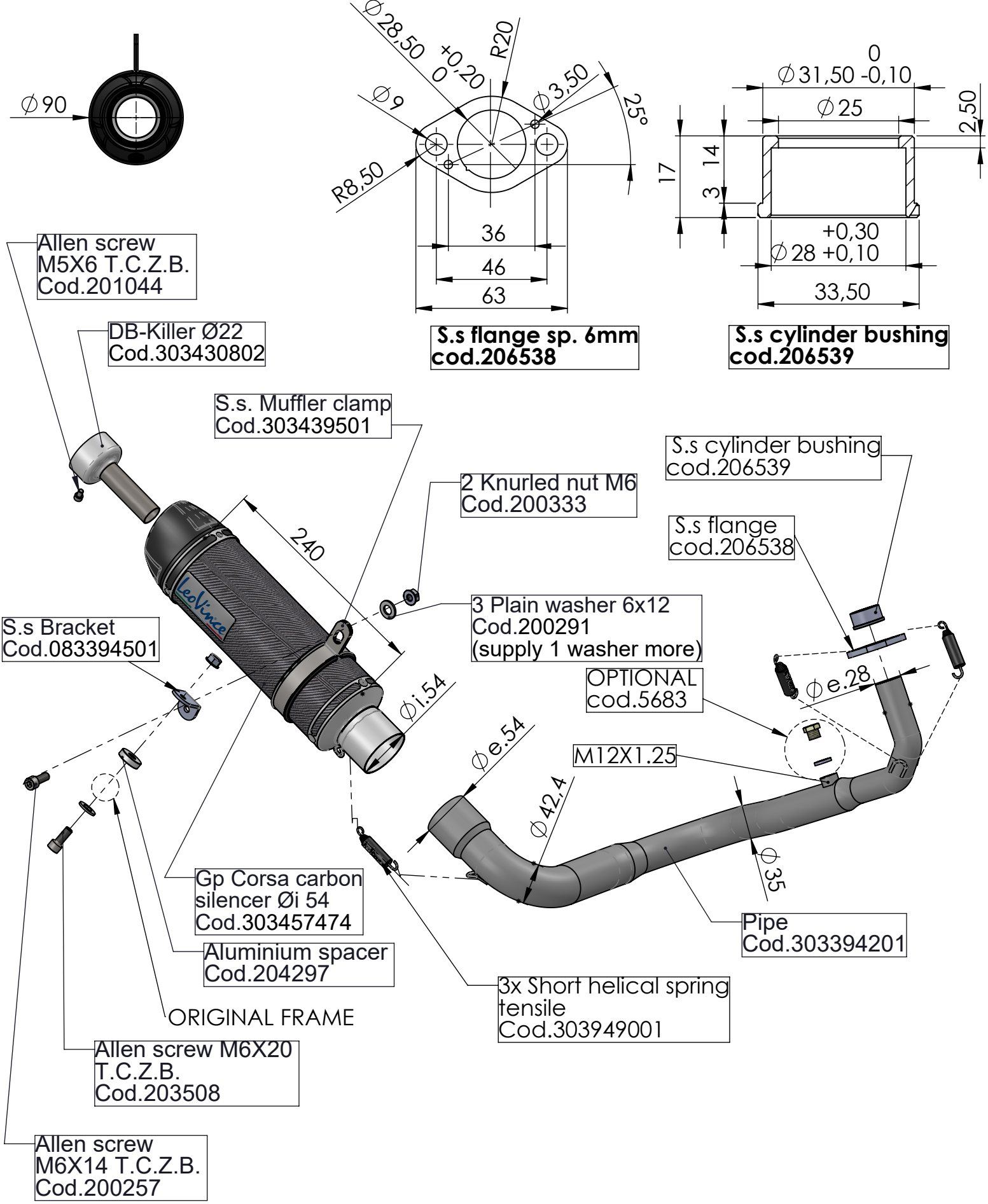

ART. 3394E

KAWASAKI Z125 PRO

FULL SYSTEM - GP CORSA EVO CARBON