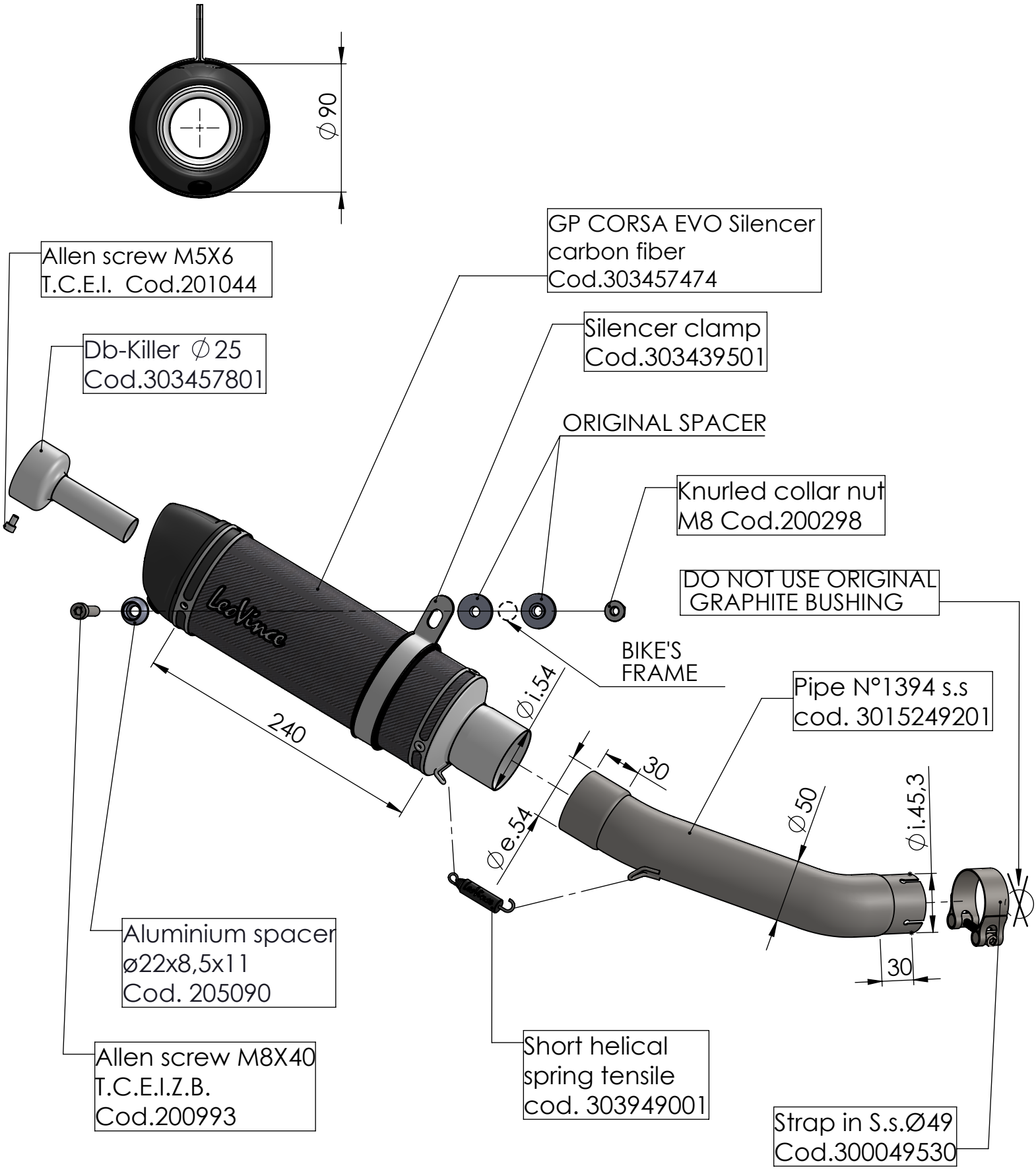

ART. 3399E

KTM DUKE 125 / DUKE 390

SLIP-ON - GP CORSA EVO - CARBON