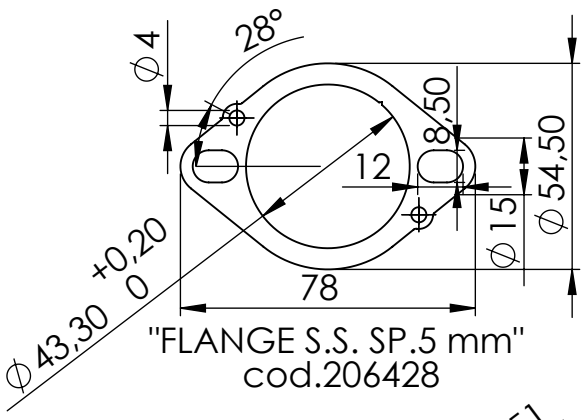

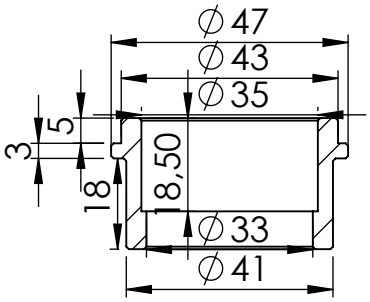

Notice:
the original heat shield
can be fitted back in position.

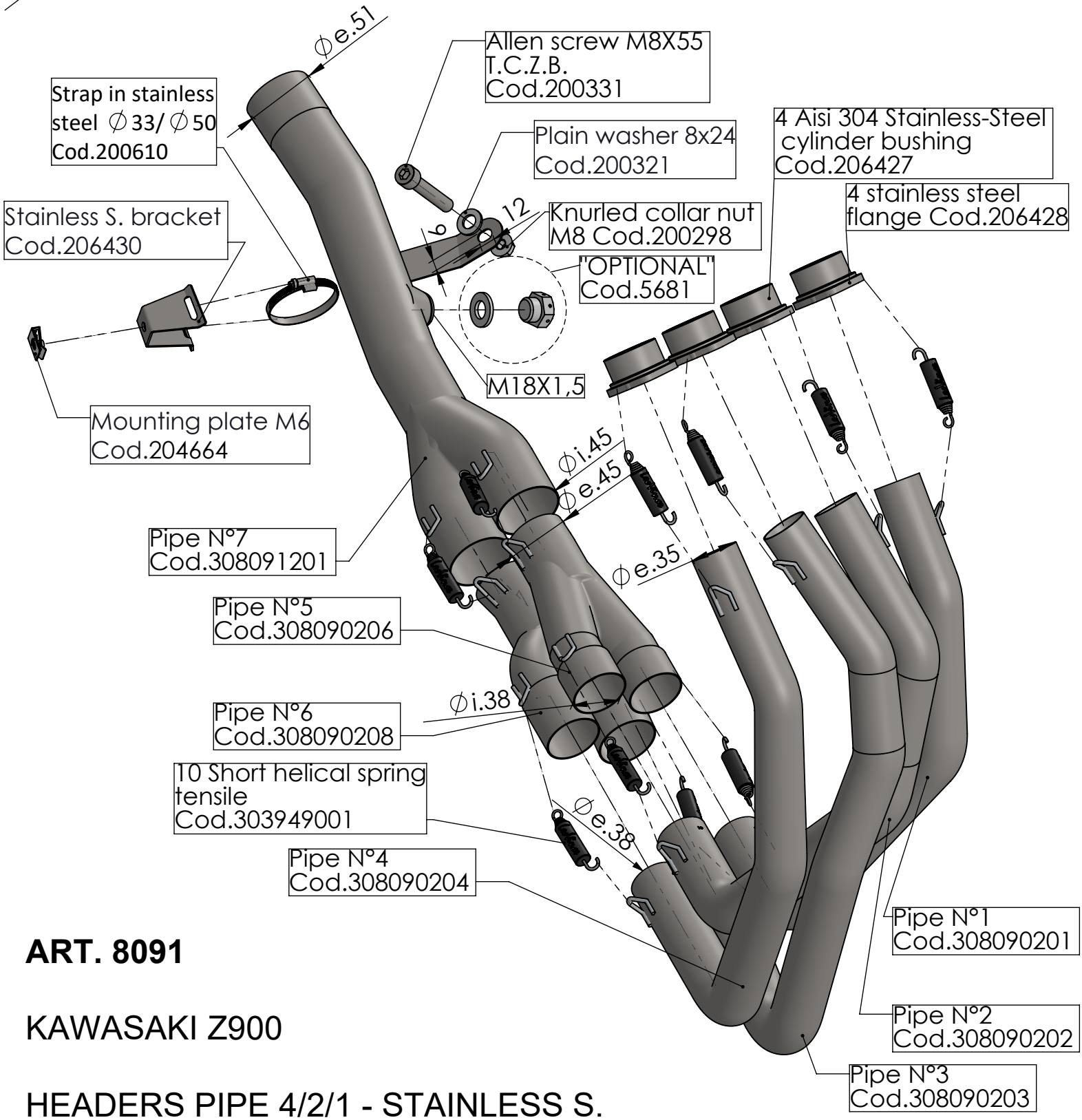

ART. 8091

KAWASAKI Z900

HEADERS PIPE 4/2/1 - STAINLESS S.

- Fitting this exhaust system it is advisable to optimize the carburation by remapping the stock ECU or by adopting an additional ECU unit.
- The link pipe can be fitted both with the stock exhaust and the LeoVince slip-on Art.15114-15204-15204B-14174S-14173S-14171E-14172E-14039.